dunkermotoren
linear systems

Servo Tube

DIN EN ISO 9001:2008

CE

Series ST

Tubular Motor Technology

Motor Technology

Comprising just two parts, a rod and forcer, the tubular linear motor is inherently simple and elegant. The stainless steel rod is filled with rare-earth magnets placed end to end. The forcer incorporates a series of coils connected as three phase windings. When the coils are excited by a three phase current, a magnetic field is created which interacts with the rod magnetic field, generating linear force.

In the linear motor configuration, the rod is held fast, while the forcer moves. The load is mounted directly to the forcer supported by a bearing rail. If the forcer is held fast, the rod moves in actuator mode. The load is connected to the rod, which is supported by a long-life, internal dry bearing.

Tubular Motor Advantages

There are essentially three types of linear motor: flat-bed, U-channel and tubular. The flat-bed delivers high force but suffers from cogging. In addition, magnetic attraction between the forcer and magnet track opposes motion. The U-channel is thermally inefficient as the heat generating coils are enclosed in magnets. The tubular motor eliminates these issues. Magnetic forces are balanced and motion is smooth and cogging-free. The forcer coils have a built-in heatsink and wrap around the magnets for optimal heat dissipation as well as the most effective use of magnetic field.

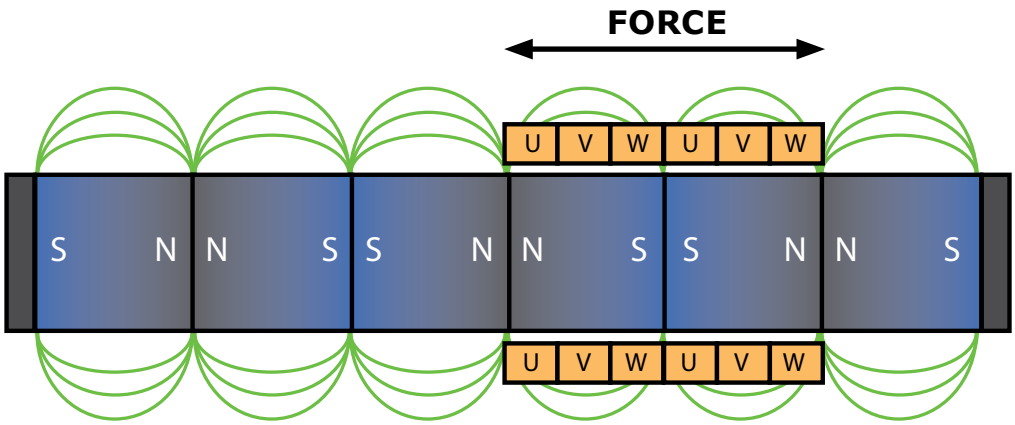

Built-In Feedback

Traditional linear motors require a costly linear encoder necessitating careful alignment during installation. Due to the sinusoidally varying magnetic field of the ServoTube linear motor, Hall sensors in the forcer can provide position information with repeatability of 12 microns. The linear encoder is eliminated. Position output is standard analog sin/cos encoder signals. Some ServoTube versions generate quadrature incremental encoder signals with digital Halls - a universal interface to all drives and controllers.

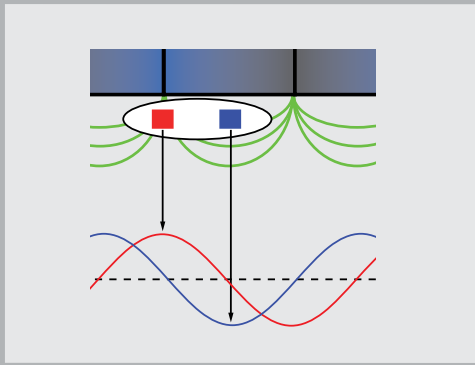

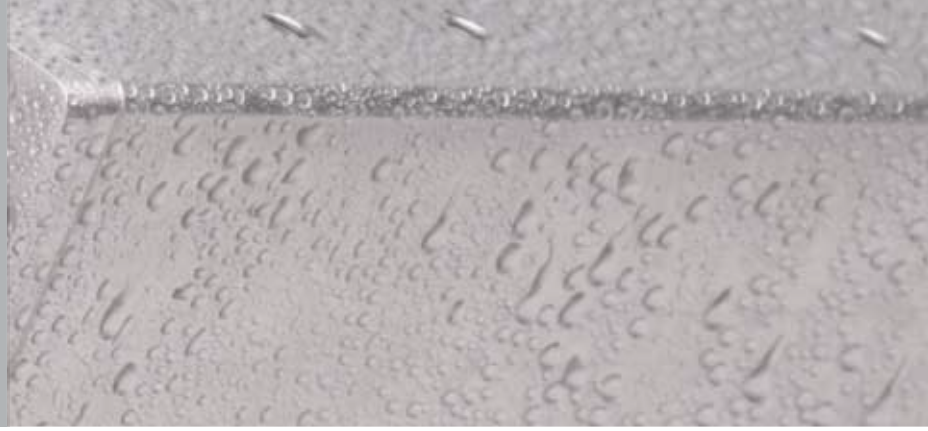

Rugged, Sealed & Submersible

Flat-bed and U-channel motors with exposed magnet tracks and fragile linear encoders require protection in some industrial environments. ServoTube, with sealed components and built-in feedback is rugged and IP67 rated. The air gap between rod and forcer is non-critical. Installation is simple and cost of ownership low. For the harshest environments a water-cooled, stainless steel version, Hygienic ServoTube, is available rated at IP69K. Hygienic Servotube also meets the requirements of IP68 for fully submersible operation.

Hygienic Application

With smooth surfaces and IP69K high-pressure wash-down rating, Hygienic Servotube is ideal for material handling applications in the food & beverage and pharmaceutical industries. The ruggedness and mechanical elegance of Hygienic ServoTube can bring significant cost savings to sterile environment applications.

Water Cooling

Water cooling approximately doubles the actuator continuous force rating. The stainless steel waterways inside the forcer require no special coolant - ordinary water can be used. Operating costs are minimal and there is no environmental impact.

316 Stainless Steel

Free from contaminant-gathering recesses, the smooth stainless steel housing of the Hygienic Servotube delivers high resistance to corrosion and chemical attack.

IP69K High-Pressure Wash-Down

The IP69K rating defines the highest level of sealing against water ingress, facilitating high-pressure wash-down. High-pressure cleaning techniques use significantly less water and cleansing agents than typical low-pressure hose-down. The cleaning process itself is easier and quicker. High-pressure wash-down reduces cost and is environmentally friendly.

Direct Electric Drive

Electric drive systems have many advantages over pneumatic solutions. While pneumatics can deliver high speed and ruggedness at low cost, they are best applied in simple bang-bang control applications. When programmable positioning and fast-settling times are specified, pneumatic systems become complex and expensive. In all cases a compressor is required and maintenance costs are high.

Belt drives and ballscrews are the traditional implementations of electric linear drive. The linear motor, with its undisputed performance and maintenance advantages, has typically been limited to high-end applications. This is mainly due to installation issues and the expense of linear encoders. The easy-to-use form factor of the ServoTube tubular motor coupled with highly cost-effective internal feedback now brings the high performance and mechanical simplicity of linear motors to mainstream industrial applications.

Going Green

Electric drive automation uses just 30% of the energy consumed by a pneumatic system, reducing carbon emissions for a greener environmental profile.

Legislation to limit audible noise is gaining momentum. Direct linear drive significantly reduces noise pollution - a critical factor in many applications, particularly laboratory automation.

Pneumatic systems also generate oil-misting pollution. Electric control eliminates air borne contaminants creating cleaner working conditions.

Tubular Motor

Pros
- High speed & acceleration
- Fast settling time
- Inherently rugged
- Maintenance-free
- Low audible noise
- Reduced machine vibration

Cons
- Limited stroke length

Ballscrew

Pros
- High force

Cons
- Limited speed & acceleration
- Requires lubrication
- Short moves cause wear
- Unsuitable for hygienic applications
- Backlash hysteresis
- High audible noise

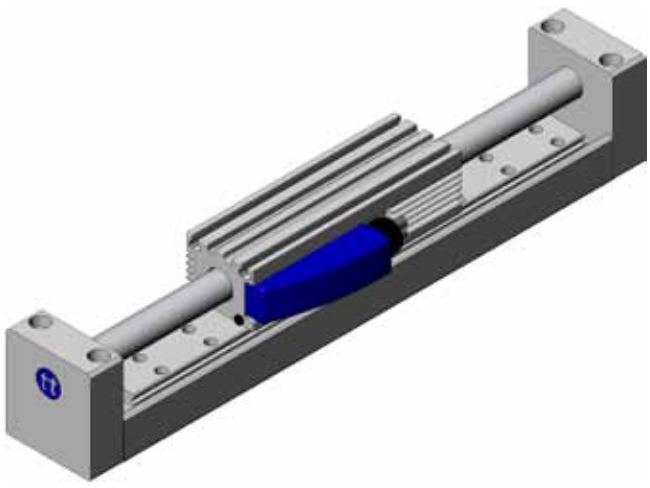

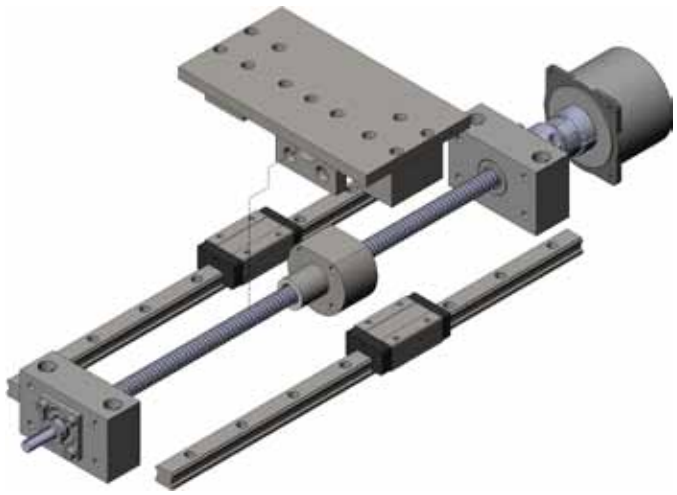

Feature	Tubular Motor	Ballscrew	Belt Drive	Pneumatics
Speed	• • • • •	• •	• • • • •	• • • •
Acceleration	• • • • •	• • •	• • • •	• • • • •
Settling Time	• • • • •	• • •	•	•
Force	• • •	• • • • •	• • •	• • • • •
Stroke Length	• •	• • •	• • • • •	• • •
Installation	• • • • •	• • •	• • •	• •
Maintenance	• • • • •	• • •	• • •	• •
Robustness	• • • • •	•	• •	• • • • •
Audible Noise	• • • • •	• •	• •	•
Green Index	• • • • •	• • •	• • • •	• •
Cost	• • •	• • •	• • • • •	• • •

Belt Drive

Pros
- High speed
- Low cost
- Long stroke

Cons
- Poor settling time
- Belts wear and need replacing
- Unsuitable for hygienic applications
- High audible noise

Pneumatics

Pros
- Lowest cost for bang-bang control
- High speed & acceleration
- Tolerates harsh environments

Cons
- Requires expensive-to-run compressor
- Closed loop control is complex & expensive
- Poor settling time
- High audible noise
- Requires significant maintenance
- Oil-misting pollution

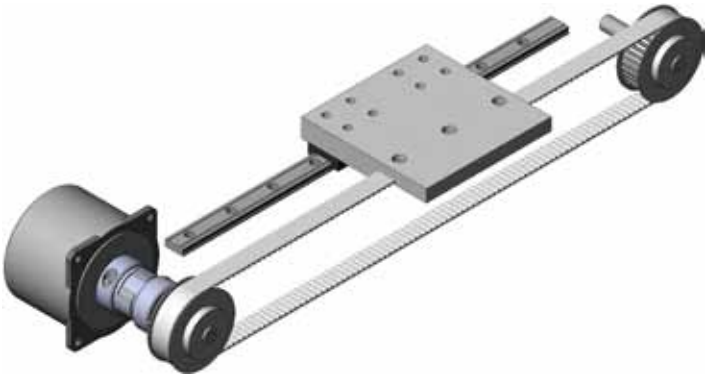

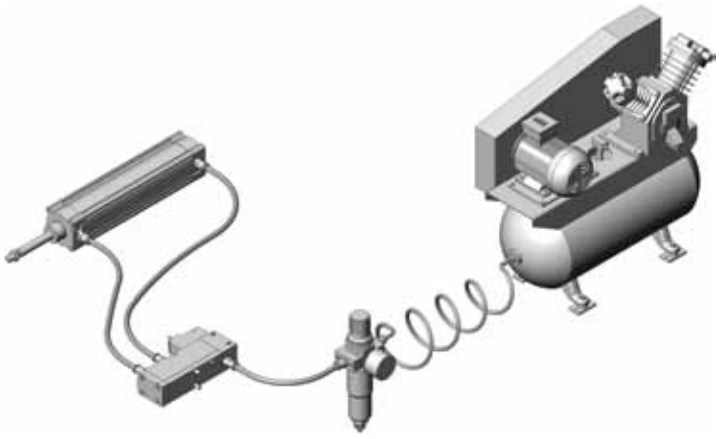

Using Tubular Motors

Dunkermotoren linear motors and actuators set a new standard for performance and simplicity in linear motion. The form factor of ServoTube enables a high degree of flexibility in mechanical configuration. Moving-rod actuators and moving-forcer linear motors are both easily mounted. Motors can be combined into pick-and-place gantries or integrated into stages with minimal design effort. Linear encoders can be added for higher-precision applications. Load connection is very straightforward. Mount directly to T-slots on the forcer or connect to the rod via industry-standard accessories.

With IP67 rating as standard and IP69K available on hygienic versions, ServoTube can be safely applied in demanding environments. The built-in heatsink eliminates the need for forced-air cooling. For hygienic applications where fins are not permitted, water cooling maximizes the continuous force rating.

Some Servotube actuator models incorporate a brake for a cost-effective, compact solution to power-down parking of vertical axes. 24 VDC operated, the brake provides a holding force of 200 N and is adjustment-free.

Actuator Mounting

The compact design of ServoTube enables high-density placement of vertical axes. Simply mount the forcer to the machine and connect the load to the rod using a range of industry-standard accessories. The rod glides on lubrication-free, field-replaceable internal bearings rated up to 64,000 km - 10 times the life of a typical ballscrew.

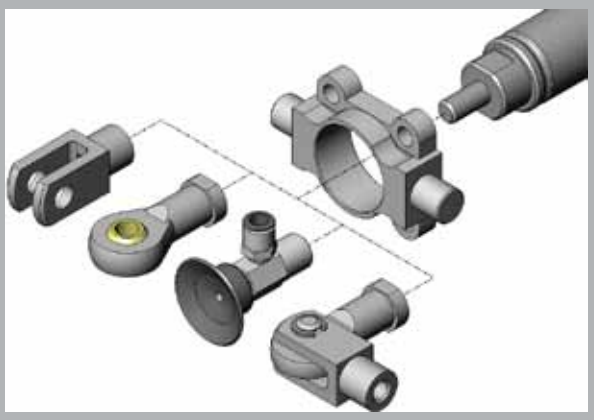

Motor Mounting

The rod is held in mounting brackets at each end, similar to a ballscrew. The large air gap eliminates the need for precision alignment. For long stroke applications, special brackets can provide an upward tensioning force to reduce the effects of gravity on the rod.

The forcer can be supported by a single bearing rail underneath or, for a lower profile, a bearing rail on each side. It is possible to run multiple forcers on one rod, which brings great mechanical simplicity to material handling applications such as loaders/unloaders.

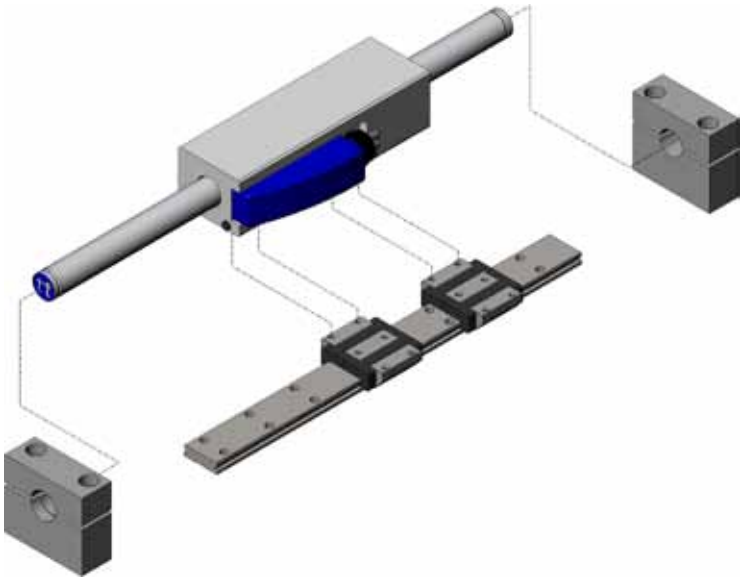

Building Gantries

After motors are mounted into modules, they can be combined quickly and simply using standard interface hardware to create a variety of multi-axis systems. Only a single interface plate is required to create a customised, fully functional pick-and-place system using a module and high-rigidity actuator. Development time and risk for automation projects are drastically reduced by employing performance-guaranteed building blocks.

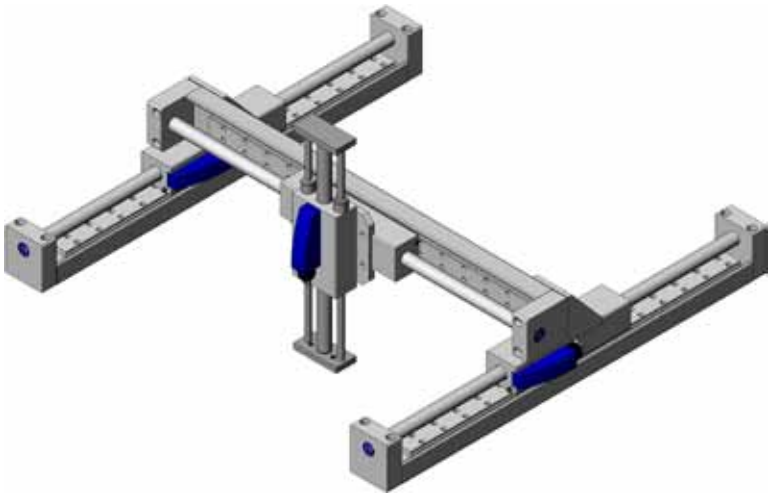

Making Stages

Tubular motors also find application in high-precision stages. Ironless construction eliminates cogging and hysteresis. The perfectly sinusoidal back EMF facilitates minimal velocity ripple for high-performance scanning applications. Combined with a precision position encoder, sub-micron levels of accuracy and repeatability are readily achievable.

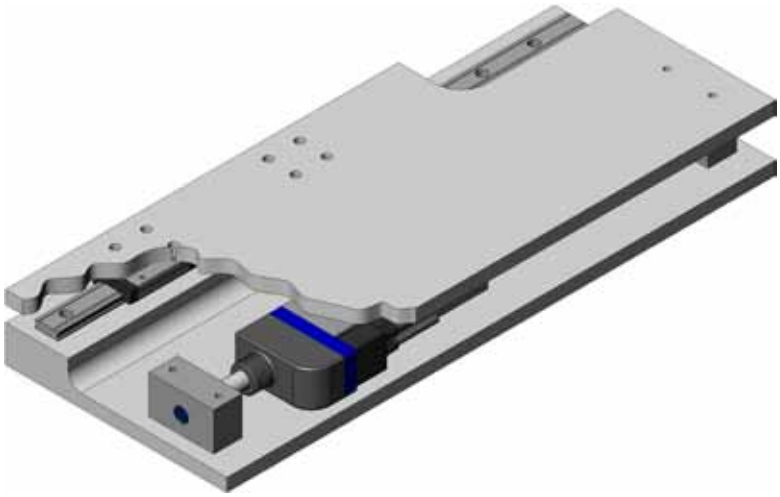

Application Examples

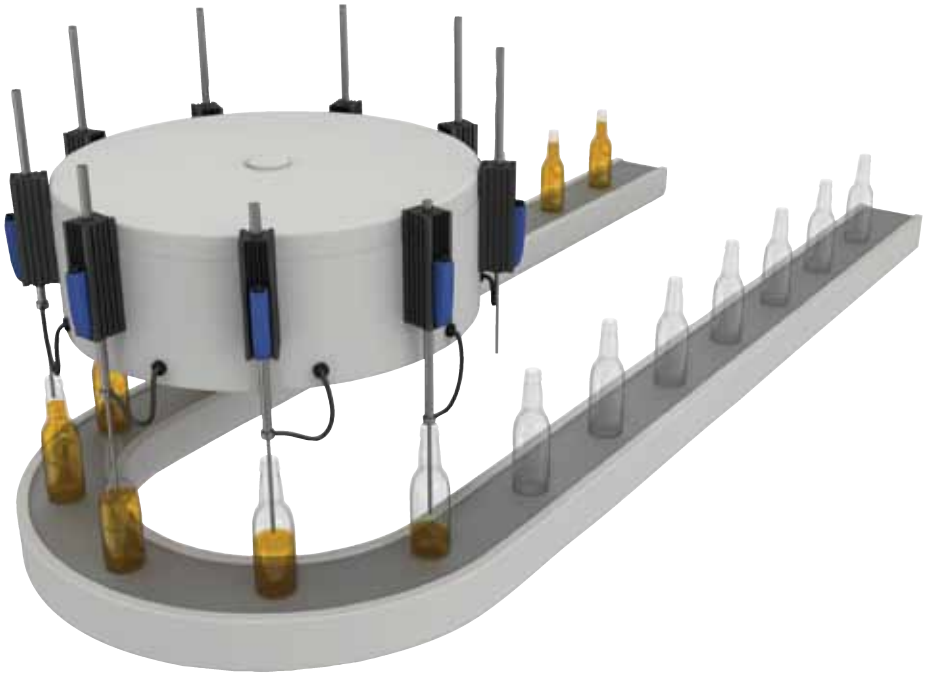

Bottle Filling

The ServoTube fillers are synchronized with the conveyor and maintain the same feed tube height above the liquid as the bottles fill. An earlier generation machine used cams which required changing for different product runs. The ServoTube implementation both eliminated downtime and significantly increased productivity.

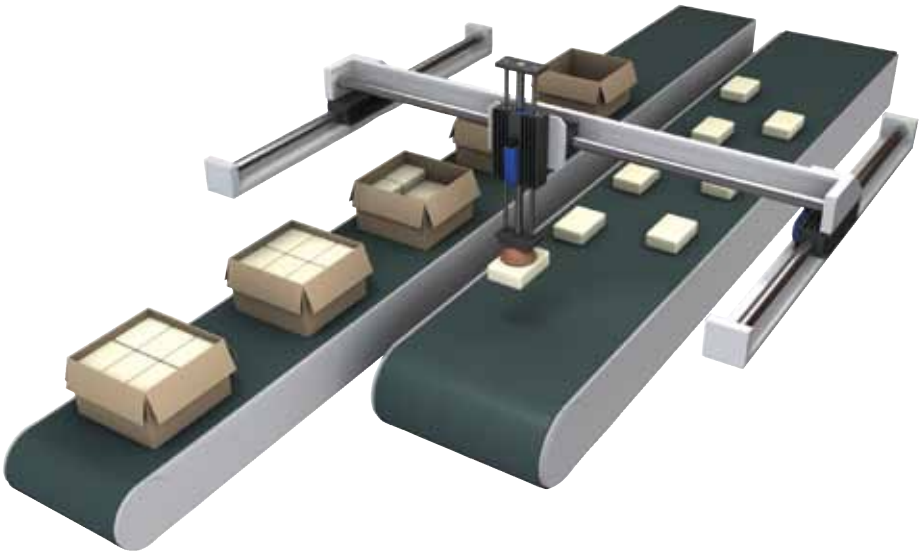

Carton Packing

Packages on the infeed conveyor are detected by a vision system then stacked into boxes on a second conveyor. The speed and dynamic response of the tubular motor gantry increased productivity by 20% compared with the original ballscrew implementation.

Conveyor Transfer

The bottles on the infeed conveyor are joined together in pairs. The bottles are separated and trimmed, then placed on a new conveyor with the correct spacing for the next process. The ability to run multiple forcers on one rod greatly simplified the mechanics of the machine.

Speed, Reliability, Simplicity

The speed and dynamic response of a tubular linear motor can significantly increase throughput versus a ballscrew. Food-safe internal dry bearings built in to the actuator have a rated lifetime ten times that of a ballscrew. The non-contact construction of the linear motor is maintenance-free and disperses no lubricants. The direct drive simplicity of ServoTube eliminates couplings, belts, pulleys and gearboxes, minimizing machine footprint. Downtime is eliminated and cost of ownership reduced.

Packet Handler

The carousel buffers and reorients stacked packages for placement on the conveyor. An older generation machine used a rotary motor in the base of the machine with a belt driving a ballscrew. Direct drive eliminated a significant number of mechanical components and reliability was increased.

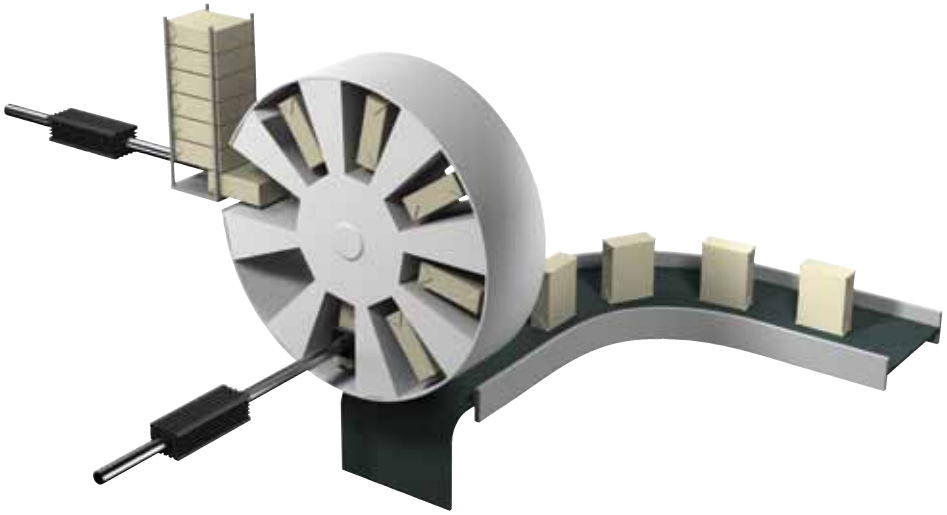

Product Family Overview

ServoTube is available in three sizes: 11, 25 and 38, indicating the rod diameter in millimeters. Each size category incorporates four forcer coil stack lengths delivering a range of forces. All ServoTube forcers have three phase windings. Position output is sin/cos analog encoder - with the exception of Hygienic ServoTube, which generates incremental encoder and digital Hall signals. Key specifications are expressed in the adjacent table. The blue icon depicts a water cooled version.

Linear Actuator

ServoTube Actuator is ideal for push/pull/lift material handling applications. An internal dry bearing provides clean, quiet, maintenance-free performance. Life expectancy far exceeds typical ballscrew solutions. The actuator accepts a range of industry-standard accessories for easy mechanical integration.

11 25 38

Hygienic Actuator

Hygienic ServoTube is a stainless steel, water-cooled version of the 38 actuator. Two models are available operating up to 600V. Position output is incremental encoder with digital Halls, enabling the motor to be used with any drive. Resolution is 10 micron with up to 25 micron repeatability.

38

Linear Motor

The ServoTube linear motor is an ideal solution for easy integration into pick-and-place gantries and material handling machines. The large air gap eliminates the need for precision alignment and simplifies installation. The load conveniently mounts directly to T-slots on the forcer.

11 25 38

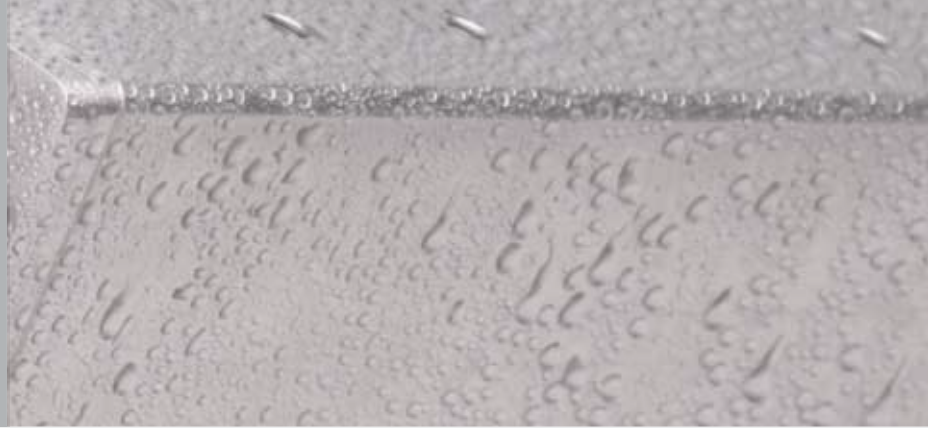

		11	25	38	38
Peak Force	N	46-92	312-780	744-1860	744-1860
Continuous Force	N	6-19	51-103	137-276	217-458
Maximum Velocity	m/s	5.6	8.7	6.2	4.7
Winding Rating	V	90	300	300	600
Forcer W x H	mm	28x61	95x54	122x70	108x72

High-Rigidity Actuator

A high-rigidity actuator is available with integrated outrigger bearings for applications with higher side loading. Ball bushings with steel bearing rails provide maximum support. Polymer bushings with aluminum rails are also available for weight-critical vertical axes. Twelve stroke lengths are available from 28-310 mm.

25

Motor Modules & Gantries

ServoTube modules are complete and ready to use, providing a quick route to integrating linear motor performance into conventional machine designs. Module subsystems are equipped with long-life single bearing rail, limit switches and drag-chain. Laser-welded bellows and hard-anodizing are optional. For applications requiring higher levels of accuracy, a fully integrated optical encoder option delivers micron resolution.

11 25 38

Consult factory for custom modules & gantries.

Representatives, Distributors and Offices / Vertretungen und Vertriebsgesellschaften

Germany

Sachsen-Anhalt Nord, Berlin, Brandenburg
Dunkermotoren GmbH
Allmendstraße 11 · 79848 Bonndorf
Tel. (07703) 930-0 · Fax -210/212
www.dunkermotoren.com
info@dunkermotoren.de

Niedersachsen, Hessen Nord, Westfalen Ost
Ingenieurbüro Heinrich Jürgens
Roggenhof 5 · 31787 Hameln
Tel. (05158) 980-98 · Fax 99
ingenieurbuero.juergens@real-net.de

Hamburg/Bremen, Schleswig-Holstein,
Niedersachsen Nord, Mecklenburg Vorpommern
Technisches Büro Kühling/Merten
Redder 1 B · 22393 Hamburg
Tel. (040) 5234098 · Fax (040) 5282476
www.kuehling-merten.de · km@kuehling-merten.de

Ruhrgebiet
Lothar Amborn
Fasanenstrasse 21b · 45134 Essen-Stadtwald
Tel. (0201) 4435-00 · Fax 01
lothar.amborn@t-online.de

Rheinland
ATS Antriebstechnik Schlote
Reisertstrasse 10 · 53773 Hennef
Tel. (02242) 90415-90 · Fax -99
o.schlote@antriebstechnik-nrw.de

Hessen
Antriebstechnik Eberhardt GmbH
Landgrabenstrasse 21 · 61118 Bad Vilbel
Tel. (06101) 98168-0 · Fax -10
www.antriebstechniken.de/eberhardt
info@ategmbh.de

Bayern Nord
Christleven Elektrotechnik GmbH
Office Bayreuth
Preuschwitzer Str. 36 · 95445 Bayreuth
Tel. (0921) 15 11 788-0 · Fax (0921) 15 11 788-88
www.christleven.de · info@christleven.de

Sachsen, Thüringen,
Sachsen-Anhalt Süd
Christleven Elektrotechnik GmbH
Office Chemnitz
Herrmannstr. 28a · 04741 Roßwein
Tel. (03432) 27 99 239 · Fax (0921) 15 11 788-88
www.christleven.de · info@christleven.de

Bayern Süd
Christleven Elektrotechnik GmbH
Office München
Faustnerweg 10 · 81479 München
Tel. (089) 72 77 97 97 · Fax (0921) 15 11 788-88
www.christleven.de · info@christleven.de

Württemberg
Technisches Büro Späth
Dornierstrasse 4 · 71069 Sindelfingen-Darmsheim
Tel. (07031) 794 34-60 · Fax -70
www.spaeth-technik.de · tb.spaeth@t-online.de

Nordbaden, Rheinland-Pfalz, Saarland
Dunkermotoren GmbH
Andreas Rau
Postfach 11 11 13 · 76061 Karlsruhe
Tel. (0721) 830 1021 · Fax (0721) 830 1035
andreas.rau@dunkermotoren.com

Südbaden
Dunkermotoren GmbH
Allmendstrasse 11 · 79848 Bonndorf
Tel (07703) 930-0 · Fax (07703) 930-210
info@dunkermotoren.com

Europe and Overseas

Austria
Dunkermotoren
Armin Keller - Sales Representative Austria
Tel. +43 7250 80 230 · Fax +43 7250 671
armin.keller@dunkermotoren.com

Belgium / Luxembourg
Elmeq B.V.B.A.
Industrial Zone Beveren-Noord
Onledegoedstraat 79 · 8800 Roeselare
Tel. +32 51 25 98-11 · Fax -18
www.elmeq.be · info@elmeq.be

China
East China - Dunkermotoren (Taicang) Co.,Ltd
No. 9 Factory Premises · 111 North · Dongting Road
Taicang Economy Development Area
Taicang 215400, Jiangsu Province
Tel: +86 512-8889 8889-101 ·Fax: +86 512-8889 8890
Email: sales.cn@dunkermotoren.com

South China - Dunkermotoren (Taicang) Co.,Ltd.
Guangzhou Representative Office · Room 3906,
39 floor, block B, Fuli Jinxi Business Center
No 5 Fuchang Lu, Haizhu Distric, Guangzhou City,
Guangdong Province
Tel: +86 20-8920 9413 · Fax: +86 20-8920 9411
Email: sales.cn@dunkermotoren.com

North China - Dunkermotoren (Taicang) Co.,Ltd.
Beijing Representative Office · No.916 Room,
Thirsty Building ,2 South 3rd Ring Road,
Chaoyang District, Beijing City, P.R. China 100022
Tel: +86 10 6568 5852 · Fax: +86 10 6568 5853
Email: sales.cn@dunkermotoren.com

West China - Dunkermotoren (Taicang) Co.,Ltd.
Chongqing Representative Office · Room 25-2,
D Building, Wanda Piazza Commercial Apartment, No.8
JiangNan Road NanAn District Chongqing
Tel: +86 23-6280 0974 · Fax: +86 23-6280 0974
Email: sales.cn@dunkermotoren.com

Czech Republik
Schmachtl CZ s.r.o.
Vestec 185 · 25242 Jesenice
Tel. +42 02 44 00 15 00 · Fax +42 02 44 91 07 00
www.schmachtl.cz · office@schmachtl.cz

Denmark
DJ Stork Drives - a branch of DJ Stork Drives AB
Korskildelund 6 · 2670 Greve
Tel. +45 3691 5251 · Fax. +46 8 635 60-01
www.storkdrives.dk · per.nielsen@storkdrives.dk

Finland
Wexon OY
Juhanilantie 4 · 01740 Vantaa
Tel. +358 9 290 440 · Fax +358 9 290 44100
www.wexon.fi · wexon@wexon.com

France
Dunkermotoren France S.A.S.
Actipôle de La Fonderie · Bâtiment le Cobalt
470 Route du Tilleul · 69270 Cailloux sur Fontaines
Tél: +33 633 804 410
sales.fr@dunkermotoren.com

Great Britain
Dunkermotoren UK Ltd.
Kingfisher House · Suite 2 · Rownhams Lane
North Baddesley · Southampton · Hants · SO52 9LP
Tel. +44 23807 33509 · Fax +44 23807 34237
sales.uk@dunkermotoren.com
Email: peter-lawton@dunkermotoren.com

Italy
Dunkermotoren Italia s.r.l.
Corso Sempione, 221 · I-20025 Legnano MI
Tel. +39 0331-596165 · Fax +39 0331-455086
sales.it@dunkermotoren.com

Korea
Dunkermotoren Korea Ltd.
Parkview 19th, 1908-Ho, #6, Jeongja-dong,
Bundang-gu, Seongnam-si, Gyeonggi-do, 463-863
Tel. +82 31 719 0033 · Fax +82 31 719 0134
junghoon.myoung@dunkermotoren.com

Netherlands
ERIKS Aandrijftechniek bv
Broeikweg 25 · 2871 RM Schoonhoven
Tel. +31 182 30 34 56 · Fax +31 182 38 69 20
www.eriks-at.nl · info.schoonhoven@eriks-at.nl

Norway
DJ Stork Drives - a branch of DJ Stork Drives AB
Storgata 15 · NO-2750 Gran
Tel. +47 6160 9492 · Fax. +47 6717 6401
www.storkdrives.no · arve.stensrud@storkdrives.no

Poland
P.P.H. Wobit E.K.J. Ober S.C.
UL. Gruszkowa 4
61-474 Poznan
Tel. +48 61 8350-800 · Fax -704
www.wobit.com.pl · wobit@wobit.com.pl

Slovakia
Schmachtl SK, s.r.o.
Valchárska 3 · 82109 Bratislava
Tel. +421 2 582756-00 · Fax -01
www.schmachtl.sk · office@schmachtl.sk

Spain
Elmeq S.L.
(Gran Via Center) · C/ Vilamarí 50, 3° A y B
08015 Barcelona
Tel. +34 93 422 70 33 · Fax +34 93 432 36 60
www.elmeq.es · contacto@elmeq.es

Sweden
DJ Stork Drives AB
Box 1158 · Strandväg 116
SE-171 54 Solna
Tel. +46 8 635 60-00 · Fax -01
www.storkdrives.se · info@storkdrives.se

Switzerland
Dunkermotoren
Rolf Leitner - Sales Representative Switzerland
Tel. +41 44 799 17-71· Fax-75
rolf.leitner@dunkermotoren.com

Turkey
Femsan
Harmandere Mah. Tasocak
Yolu No.8 · 81520 Kurtkoy – Pendik · Istanbul
Tel. +90 216 482 48 44 · Fax +90 216 482 50 52
www.femsan.com · info@femsan.com

United States of America
Dunkermotoren USA Inc.

Headquarters
2511 Technology Drive, Suite #105
Elgin, IL 60124
Tel. +1 224 293 1300 · Fax +1 224 293 1301
www.dunkermotor.com · info@dunkermotor.com

US Mid West and South East regions
2511 Technology Drive, Suite #105
Elgin, IL 60124
Tel. +1 224 293 1300 · Fax +1 224 293 1301
www.dunkermotor.com · info@dunkermotor.com

US North East region
18 Columbine Lane
Kings Park, NY 11754
Tel. +1 631 724 1701 · www.dunkermotor.com
Kenneth.Remis@dunkermotoren.com

US West Coast region
2715W 180th Street
Torrance, CA 90504
Tel. +1 310 323 1996 · www.dunkermotor.com
Dee.Chatterjee@dunkermotoren.com

Production: Dunkermotoren Linear Systems Ltd.
Wollaston Way · Basildon, SS13 1DJ · UK
www.dunkermotoren.de/Linear · Tel. +44 1268 287070 · Fax +44 1268 928372

© 02/2012 Di2 Ideenschmiede 2500 EN / 2. Printed in Germany /MD